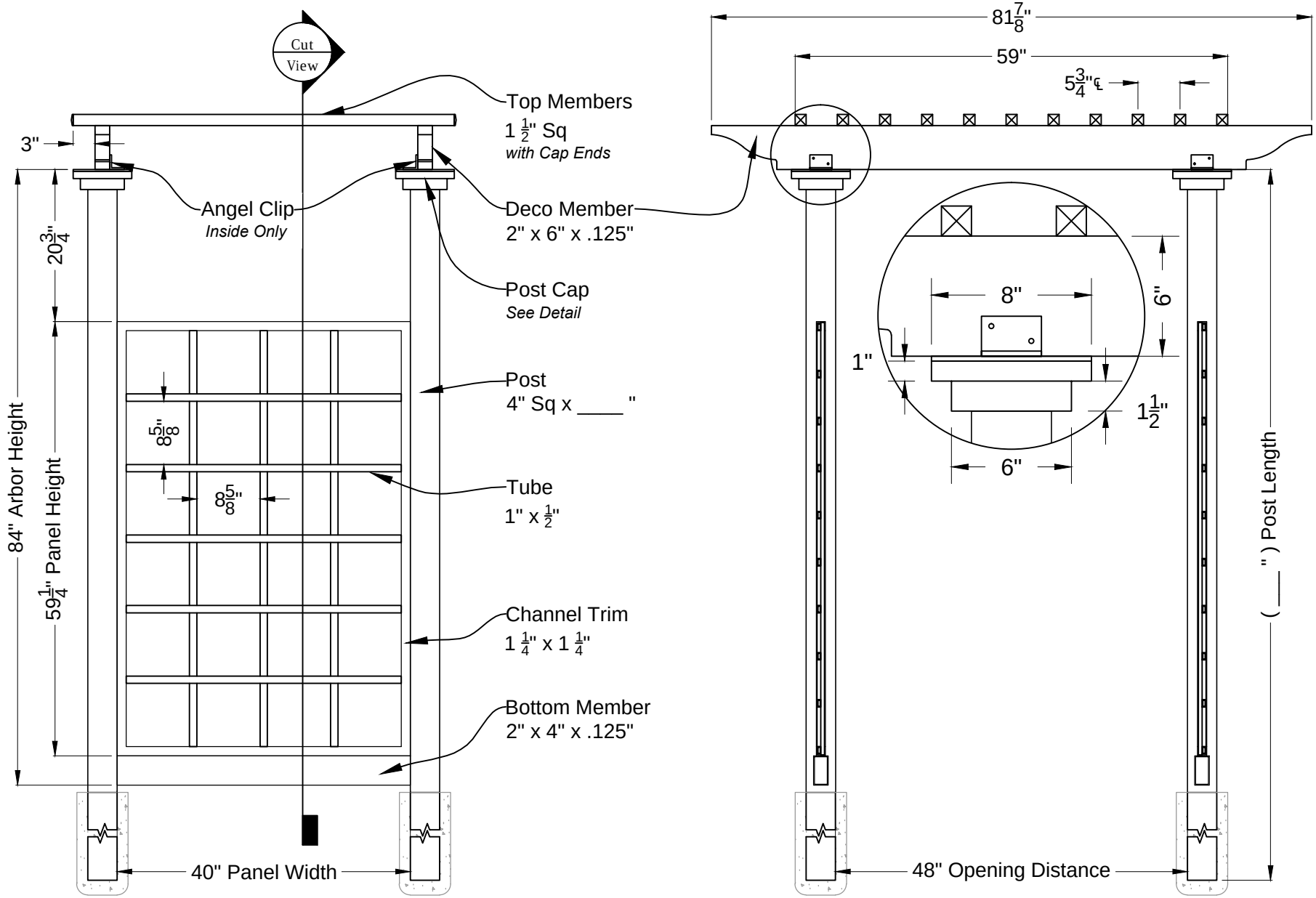

iDeal aluminum
fence gates railing
Phone: 386-736-1700 / Fax: 386-822-4950
www.iDeal-ap.com

**This drawing is the property of Ideal Aluminum Products.
It is not to be reproduced, copied, or traced
in whole or in part without written concent.**

HORIZON_ARBOR_48"O X 84"H